GAGGENAU

400 series warming drawer
WS 463

WS 463 710
Stainless steel-backed glass front.
Width 24″ (60 cm), Height 8 3/16″ (21 cm).

Highlights
- Handleless warming drawer.
- Perfect for a side-by-side combination of 30″ single oven and 24″ Combi-steam oven, Combi-microwave oven or a 24″ espresso machine.
- Bright interior light.
- Cushioned closing system.
- Hygienic stainless steel interior with glass bottom.
- 4 temperature levels ranging from 100 °F – 175 °F.
- Also for preparing and cooking meals.
- Net volume 1.0 cu.ft.

Cooking modes
Defrosting of meals/proofing of yeast dough.
Preheating of small beverages.
Keeping meals warm/slow cooking.
Warming of ovenware.

Operation
Rotary knob operation.
Recessed grip at the front bottom of drawer.

Features
Volume capacity: Dinner set for 8 people including ø 9 1/2″ plates and soup bowls, additional bowls and serving dishes depending on size.
Max. load 33 lbs.
Usable interior dimensions:
H 5 5/16″ × W 18 11/16″ × D 18 1/16″
Integrated base glass plate heating for easy cleaning.
Convection fan for even heat distribution.
Status display, visible in the glass front.
Glass bottom made of safety glass.

Planning notes
The front of the appliance extends 1 7/8″ from the cabinet carcass.
When mounting a BS Combi-steam oven/BM Combi-microwave oven/CM espresso machine directly above drawer in 24″ cutout, the partition shelf is only required if installing in a horizontal configuration next to a BO 480/481 oven to ensure proper alignment.
Otherwise the partition shelf is not required.
Built-in under countertop or in single cut-out.
When mounting the drawer below the 400 series Combi-steam oven, plan a recess of at least 1 3/8″ between the back wall and the drawer to allow for the inlet and outlet hose to be installed appropriately.
The electrical outlet can be planned behind the appliance.

Please read the installation details regarding oven combination on page 12–13.

Rating
Total rating: 810 W.
Total Amps: 10 A.
120 V / 60 Hz
Connecting cable 59″ with plug.

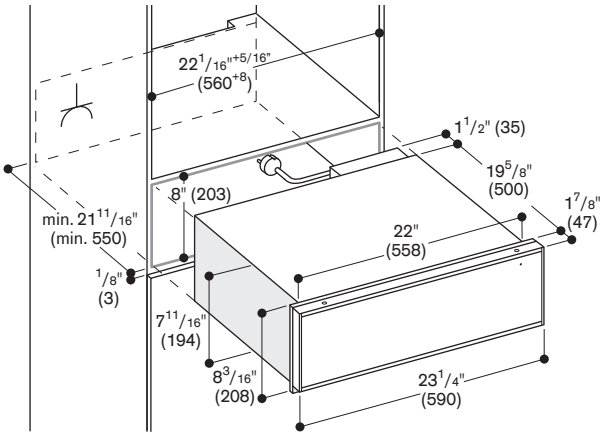

Side view of WS 463 below BS Combi-steam oven, BM Combi-microwave oven or CM espresso machine

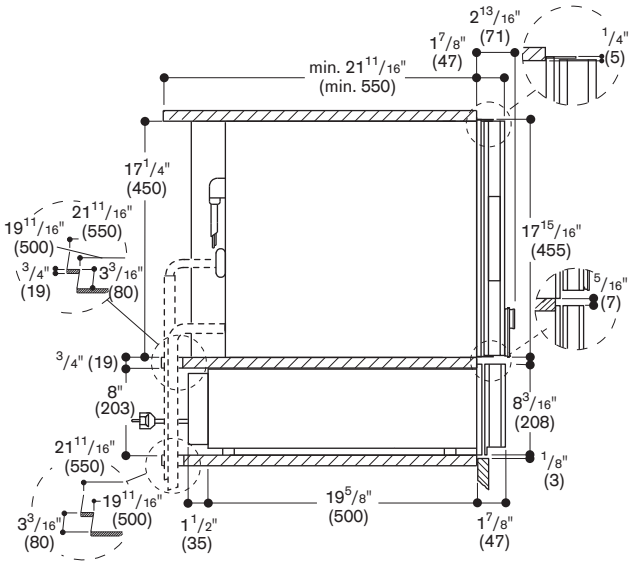

Numbers indicated inside parenthesis ( ) = mm

www.gaggenau.com/us
Revised: December 2024